CONE CRUSHERS

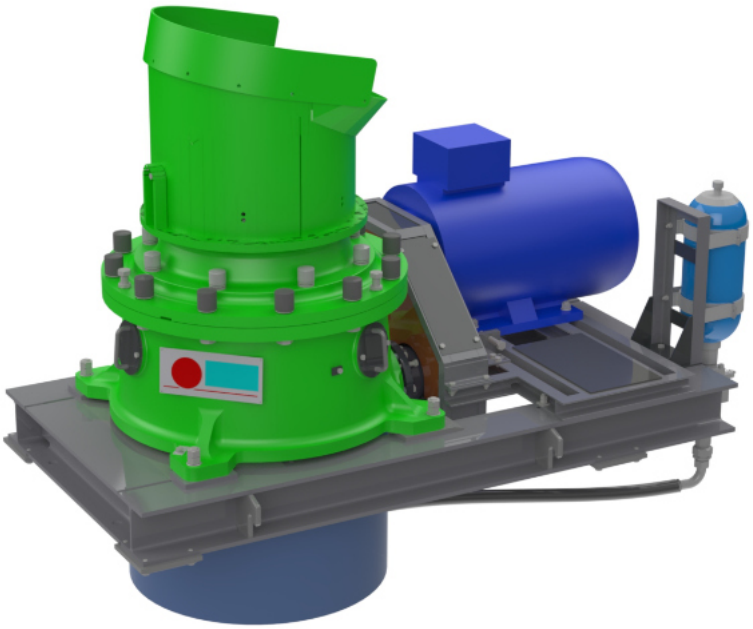

Advantages

- ✓ fully automatic crusher operation including gap setting
- ✓ low operation costs
- ✓ high operation reliability
- ✓ high degree of crushing ratio
- ✓ easy operation and maintenance
- ✓ crushing elements with long lifetime
- ✓ high quality of final product

Type	Inlet [mm]	Gap [mm]	Output [t/h]	El. motor [kW]	Type of crushing chambers
KDC 22	150-170	19-35	8-180	3	HP
KDC 32	8-90	4-25	30-120	5,5	SP, JP, FP
KDC 23	175-245	20-50	135-265	18	VP, HP
KDC 33	35-135	6-32	80-200	37	SP, JP, GP, FP
KDC 24	200-280	22-57	140-400	75	VP, HP
KDC 34	40-150	7-34	80-300	110	SP, JP, GP, FP
KDC 27	250-380	22-65	290-800	110	VP, HP, SH
KDC 37	40-200	10-45	160-500	132	SP, SJ, JP, GP, FP

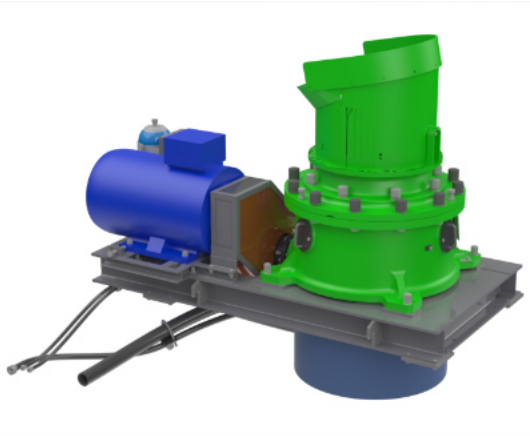

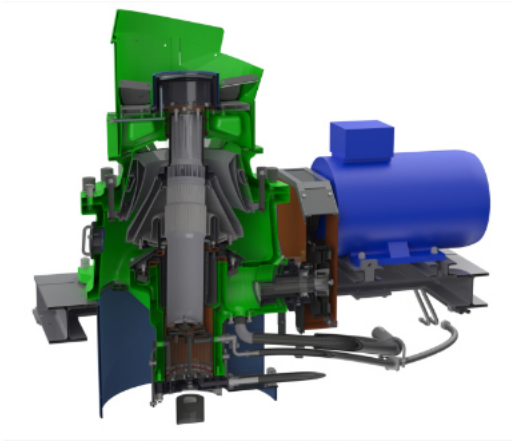

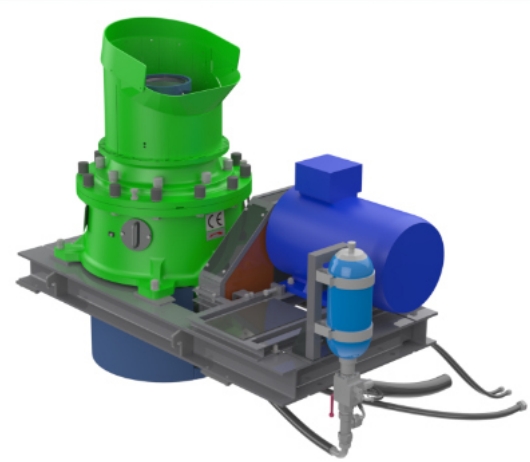

RESTA s.r.o.
CRN: 14616807
TIN: CZ 14616807

Kojetínská 3120/75
750 02 Přerov
Czech Republic

resta@resta.cz
+420 581 741 811

www.resta.cz